REV.	ECN NO./DESCRIPTION	DATE
A	R14029	02/15'17

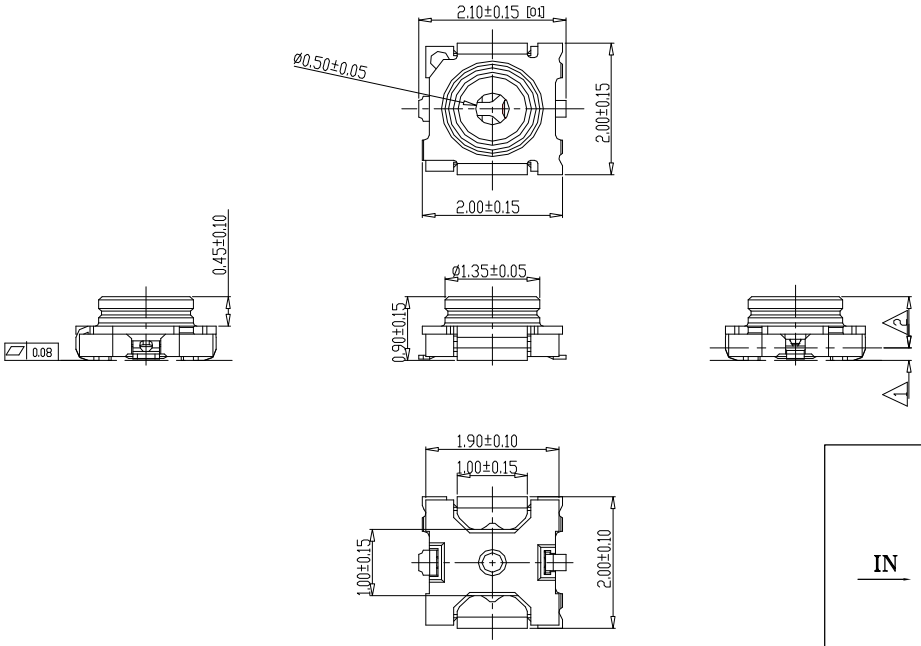

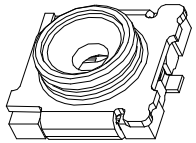

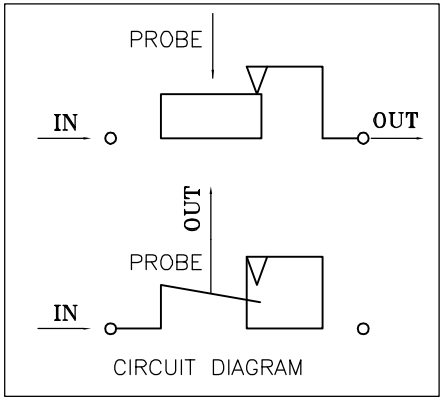

CIRCUIT DIAGRAM

NOTES:

1. MATERIAL SPECIFICATION:
   1-1. HOUSING: LCP, UL94V-0, COLOR: BLACK.
   1-2. IN TERMINAL: STAINLESS STEEL
   1-3. OUT TERMINAL: COPPER ALLOY
   1-4. SHELL: COPPER ALLOY.
2. PLATING SPECIFICATION:
   2-1. IN TERMINAL:
        30U" MIN. COPPER UNDER PLATING OVER ALL.
        40U" MIN. NICKEL UNDER PLATING OVER ALL.
        Au1U" PLATING ON CONTACT AREA.
        Au1U" PLATING ON SOLDER AREA.
   2-2. OUT TERMINAL:
        40U" MIN. NICKEL UNDER PLATING OVER ALL.
        Au1U" PLATING ON CONTACT AREA.
        Au1U" PLATING ON SOLDER AREA.
   2-3. SHELL:
        40U" MIN. NICKEL UNDER PLATING OVER ALL.
        Au1U" PLATING ON SOLDER AREA.
3. HF COMPLIANT.
4. MECHANICAL PERFORMANCE: DURABILITY: 100 CYCLES.
5. ELECTRICAL PERFORMANCE:
   5-1. LLCR: INITIAL 80mΩ MAX.; AFTER TEST 160mΩ MAX.
   5-2. DIELECTRIC WITHSTANDING VOLTAGE: 300V AC FOR 1 MINUTE.
   5-3. VSWR: 1.2MAX.(DC TO 3GHz),1.3MAX.(3GHz TO 6GHz),
        1.5MAX.(6GHz TO 11GHz).
   5-4. ISOLATION: 20DB MIN.(DC TO 3GHz),15DB MIN.(3GHz TO 6GHz),
        10DB MIN.(6GHz TO 11GHz).
   5-5. INSERTION LOSS: 0.1DB MAX.(DC TO 3GHz),0.2DB MAX.(3GHz
        TO 6GHz),0.5 DB MAX.(6GHz TO 11GHz).
6. IR REFLOW:
   THE TEMPERATURE SHALL BE 250±5°C MAINTAINING 10±1SECONDS.

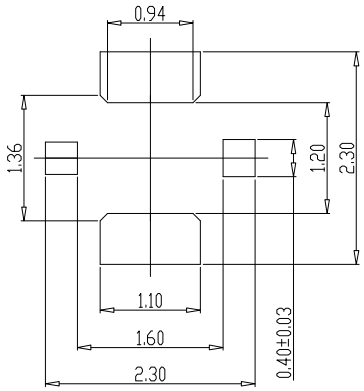

THICKNESS 0.10mm
RECOMMEND STENCIL MASK PATTERN

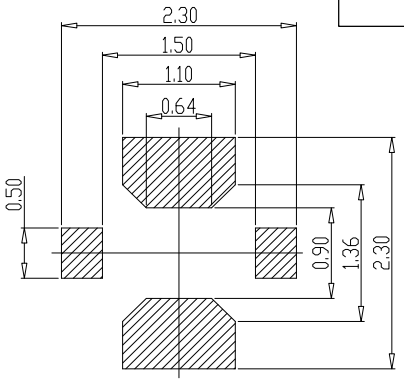

RECOMMEND PCB LAYOUT
TOLERANCE:±0.05
THICKNESS 1.00mm

LAND(GOLD PLATING)
ELECTRODE

GENERAL TOLERANCES UNLESS SPECIFIED		PART NO.	BonWorld
.X ± 0.35	X.° ± 3°	19.018A1-0001R0	
.XX ± 0.25	.X° ± 2°	APPROVED BY: Yongquan Wu	TITLE: Mini RF SWITCH 0.9H
.XXX ± 0.15	.XX° ± 1°		
CUSTOMER DRAWING		CHECKED BY: Jay Peng	DWG NO. BW170215002
SIZE: A4	UNITS: MM[INCH]	DRAWN BY: Liu lei	SHEET 1 / 1 · SCALE 8:1 · REV A