CAD GENERATED DRAWING, DON'T CHANGE BY HAND

REV.	ECN. NO.	APPD.
A	BW-200324-001	hongbo.suo

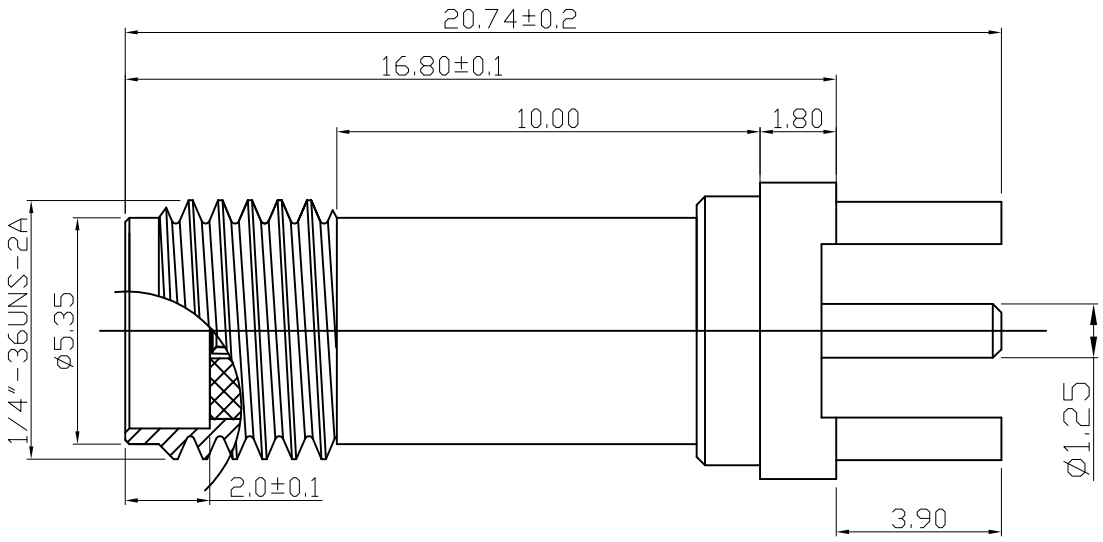

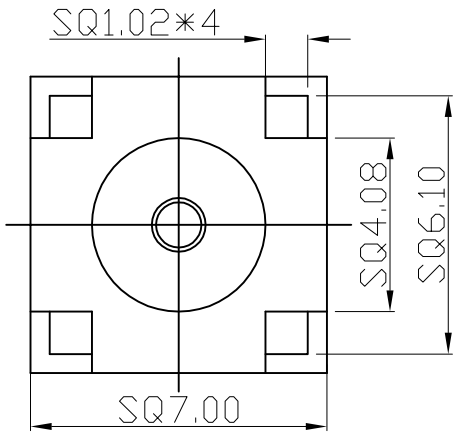

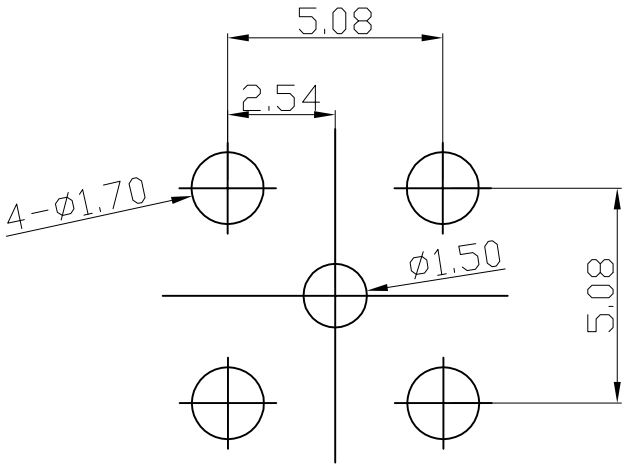

1. Electrical Characteristics
   1.1 Impedance: 50 Ohm
   1.2 Working Frequency: DC - 3 GHz
   1.3 S.W.R.: ≤ 1.5
   1.4 Working Voltage:335V / max
   1.5 Insulation Resistance: 1000 Mohm
   1.6 Contact Resistance: Center Contact:5 mohm
   1.7 Outer Contact: ≤2.5 mohm
2. Environmental
   2.1 Working Temperature Range: - 55 ° C~ +125° C
   2.2 Salt spray test:48H

部件序号	部件品名/规格	材料	用量
1	螺牙本體	C3604 镀金6u'	1
2	絕緣體	PTFE 白色	1
3	pin針	C3602 镀金6u'	1

THESE DRAWINGS AND SPECIFICATIONS ARE THE PROPERTY OF SINOPOW COMMUNICATION THECHNOLOGY LIMITED AND SHALL NOT BE REPRODUCED. COPIED OR USED IN ANY MANNER WITHOUT THE PRIOR WRITTEN CONSENT OF SINOPOW COMMUNICATION THECHNOLOGY GROUP.

X. ± /	X°. ± /	MAT'L SEE NOTES
.X ± 0.2	.X° ± /	UNITS mm
.XX ± 0.1	.XX° ± /	FINISH SEE NOTES
.XXX± 0.05	.XXX°± /	

Title: SMA JCAK S/T FOR PCB

APPD: hongbo.suo

CHKD: K.N

DR: chunying.wei 2020.03.24

BonWorld

PART NO. 25.02TAP-1681Y0

DWG NO. A006-SMA-P-20.74

SCALE	SHEET	REV.
1:1	1/1	A